TO-220-TR35功率型電阻 POWER RESISTOR-TR35 SIZE

■ 特性 Feature

- 安裝在散熱器，於25℃時，額定功率達35瓦
  35 Watts at 25℃ case temperature heat sink mounted
- TO-220模壓塑封包裝
  TO-220 style power package
- 只用一顆螺絲，便可安裝於散熱器上
  Single screw mounting to heat sink
- 導電部分和金屬底板絕緣，高絕緣度
  Molded case for protection and easy to mount
- 保護性高的模壓塑膠封外盒，且易於安裝
  Molded case for protection and easy to mount
- 無感設計
  Non-Inductive design

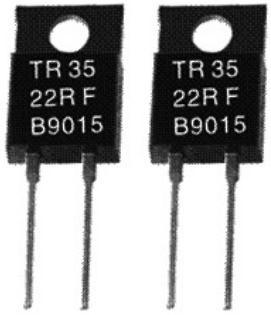

■ 訂貨方式 HOW TO ORDER

TR	35	B	J	1KΩ	TC10
a	b	c	d	e	f

a: 名稱 Product code
b: 額定功率 Rated Power
c: 包裝方式 Type
d: 容許誤差 Tolerance
e: 電阻值 Rresistance value
f: 溫度係數 TCR(PPM/℃)

■ 應用範圍 Applications

- 射頻功率放大器、緩衝電路
  RF power amplifier, the buffer circuit
- 交換式電源供應
  Switching power supply
- 自動化控制器
  Automation controller
- 不間斷電源、電壓整流器
  Uninterruptible power supply, voltage rectifier
- 低能量脈衝導入、UPS
  Low energy pulse introduction, UPS

■降功率曲線 Derating Curve

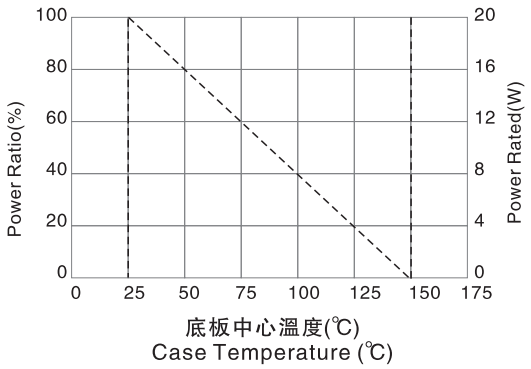

■ 尺寸 Dimensions

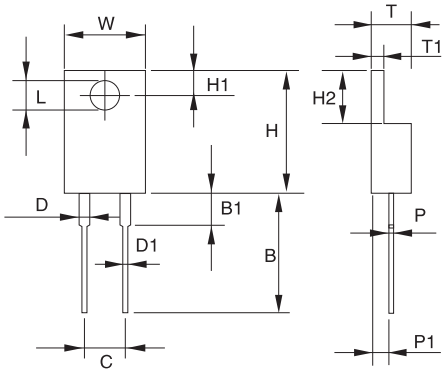

■ 結構圖 Construction

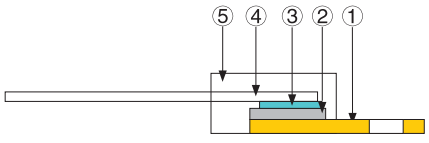

①	散熱片	Radiator Fin
②	氧化鋁基板	Alumina Substrate
③	電阻層	Resistor Layer
④	引腳	Lead
⑤	模壓封裝	Molding

(mm)

型號 Type	W ± 0.5	H ± 0.5	H1 ± 0.3	B ± 0.5	B1 ± 0.5	D ± 0.2	D1 ± 0.05	L ± 0.3	C ± 0.5	T ± 0.5	T1 ± 0.1	H2 ± 0.5	P ± 0.05	P1 ± 0.5
TR35	10.03	15.23	3.12	12.92	3.16	1.12	0.75	3.91	5.00	4.51	1.3	5.89	0.6	2.02

■ 性能 Specification

Resistance Range	TCR(PPM/℃)			
	±0.5%	±1%	±5%	±10%
>1Ω-3Ω		±300	±300	±300
>3Ω-10Ω		±100 ±200	±100 ±200	±100 ±200
>10Ω-10KΩ	±50 ±100 ±200	±50 ±100 ±200	±50 ±100 ±200	±50 ±100 ±200

- 最大工作電壓：350V; Operating Voltage: 350V max.
- 壓電強度：1,800VAC; Dielectric Strength: 1800VAC
- 絕緣阻抗：10GΩ min。 Insulation Resistance: 10GΩmin.
- 工作溫度：-65℃ to +150℃; Working Temperature Range: -65℃ to +150℃

■ 性能和測試要求 Specification And Test Methods

測試項目 Test Item	基本要求 Requirement	測試方法 Test Method
溫度係數 (T.C.R.) Temperature Coefficient of Resistance (T.C.R.)	依各規格要求. As Spec.	依據電阻於室溫25℃及高溫+105℃之測量值變化量計算 Referenced to 25℃, ΔR taken at +105℃
短時間過負荷 Short Time Overload	△R ± 0.3%	2倍額定功率，但不超過最大耐壓的1.5倍，連續5秒鐘 2 times rated power with applied voltage not to exceed 1.5 times Maximum continuous operating voltage for 5 seconds
負載壽命 Load Life	△R ± 1.0%	額定功率下2,000小時 2,000 hours at rated power
耐濕測試 Damp Heat with Load	△R ± 0.5%	40 ± 2℃,90~95%溼度下,在最大工作電壓下維持1,000小時 (1.5小時”開”,0.5小時”關”) 40 ± 2℃, 90~95% R.H. Max. working voltage for 1000 hrs with 1.5 hrs “ON” and 0.5 hrs “OFF”
焊接附著性 Solderability	90%以上覆蓋新錫 90% min. coverage	260 ± 5℃持續3秒 260 ± 5℃ for 3 seconds
熱衝擊測試 Thermal Shock	△R ± 0.3%	-65℃~150℃, 100次循環 -65℃~150℃, 100 cycles
引線強度 Terminal Strength	△R ± 0.2%	(拉力測試)2.4牛頓 (Pull Test) 2.4N
高頻震動 Vibration, High Frequency	△R ± 0.2%	20公克震動 20g peak

- 引線材料：抗氧化鍍錫銅線 Lead Material: Tinned Copper
- 最大轉矩：0.9Nm Maximum Torque: 0.9 N-m
- 在不使用散熱片，25℃常溫下，TR35額定功率是2.25W When in Free Air at 25℃, the TR35 is Rated for 2.25W
- 功率的使用極限，取決於底板中心溫度
  The Case Temperature is to be used for the Definition of the Applied Power Limit
- 底板中心溫度的測量，需用於所使用的散熱器上所安裝本器件的中央位置
  The Case Temperature Measurement must be made with a Thermocouple Contacting the Center of the Component mounted on the DesignedHeat Sink
- 散熱膏須正確應用 Thermal Grease should be Applied Properly